STAFF REPORT FOR PLANNING COMMISSION MEETING SEPTEMBER 30, 2009

FILE NO: SUP-09-076 **AGENDA ITEM H-5**

STAFF AUTHOR: Jennifer Pruitt, Principal Planner

REQUEST: Special Use Permit to allow accessory structures exceeding 75% of the primary structure for the construction of an 840 square-foot detached storage building, on property zoned Single Family 12,000 (SF12).

APPLICANT & OWNER: Edward Silsby

LOCATION: 2642 Boyle Street

APN: 009-041-02

RECOMMENDED MOTION: **"I move to approve SUP-09-076, a Special Use Permit application from Edward Silsby to allow accessory structures exceeding 75% of the primary structure area and exceeding 5% of the total lot area for the construction of an 840-square-foot building for storage purposes as a detached structure on property zoned Single Family 12,000, located at 2642 Boyle Street, Assessors Parcel Number 009-041-02, based on seven findings and subject to the recommended conditions of approval contained in the staff report."**

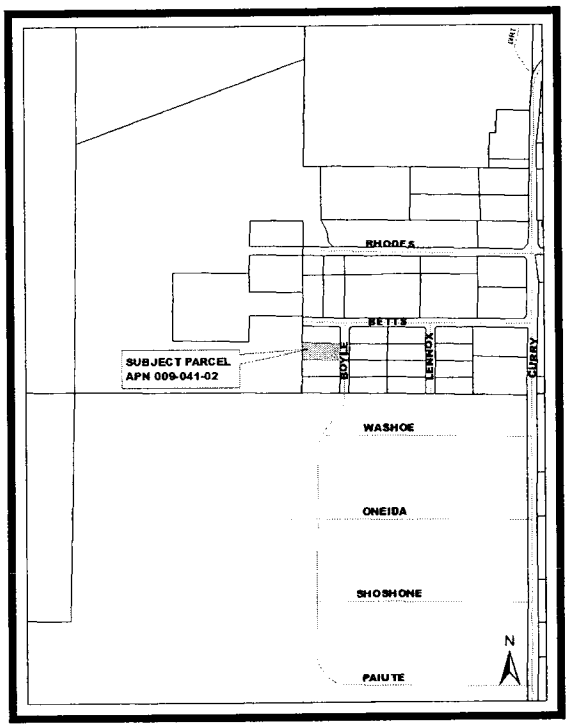

RECOMMENDED CONDITIONS OF APPROVAL:

The following standard conditions apply:

1. The applicant must sign and return the Notice of Decision / conditions of approval within 10 days of receipt of notification. If the Notice of Decision is not signed and returned within 10 days, the item will be rescheduled for the next Planning Commission meeting for further consideration.

2. The applicant shall meet all the conditions of approval and commence the use for which this permit is granted within twelve months of the date of final approval. A single, one-year extension of time may be granted if requested in writing to the Planning Division thirty days prior to the one-year expiration date. Should this permit not be initiated within one year and no extension granted, the permit shall become null and void.

3. All development shall be substantially in accordance with the development plans approved with this application, except as otherwise modified by the conditions of approval herein.

4. All improvements shall conform to City standards and requirements.

5. The accessory building will be used for storage of vehicles and equipment. No commercial activity other than a home occupation in compliance with Carson City Municipal Code Title 18.05.045 is allowed within the building. No living quarters are authorized or allowed within the accessory building.

6. The applicant shall incorporate earth tone colors (roofing and siding) for the proposed accessory structure that blend with the existing single family dwelling.

7. The storage building is only to be utilized by the applicant/family or by the tenants who live on the site or each. Rental of storage space to other persons is prohibited.

8. All exterior lighting to be residential in nature. Any proposed exterior light fixtures must be reviewed and approved by staff prior to installation.

9. The building will not exceed 21 feet in <u>overall</u> height.

10. The building footprint will not exceed 560 square feet, and the overall square footage of the proposed structure shall not exceed 840 square feet.

11. No water or sewer lines are proposed to the project. Approval of a building permit is required prior to installation of these lines in the future.

12. This project was approved by the Carson City Building Division, as noted within the seventh combined deficiency letter, dated August 13, 2009.

13. The storm-water runoff from the structure shall be directed so as to not adversely impact adjacent properties.

14. Per the Fire Department corrections are required in ordered to meet the requirements of the Wildland Urban Interface Ordinance.

LEGAL REQUIREMENTS: CCMC 18.02.050 (Review); 18.02.080 (Special Use Permits); 18.05.055 (Accessory Structures).

MASTER PLAN DESIGNATION: Medium Density Residential (MDR)

ZONING DISTRICT: Single Family 12000 (SF12)

KEY ISSUES: Will the proposed 840-square-foot storage building be compatible with adjacent land uses and properties? Would the use cause material damage to surrounding properties?

SURROUNDING ZONING AND LAND USE INFORMATION

NORTH: Single Family 12,000 (SF12) - Single-family residence
SOUTH: Single Family 12,000 (SF12) - Single-family residence
EAST: Single Family 12,000 (SF12) - Single-family residence
WEST: Single Family 12,000 (SF12) - vacant

ENVIRONMENTAL INFORMATION

1. FLOOD ZONE: Site located within a floodway.
2. SLOPE/DRAINAGE: The site slopes primarily from the west to the east toward the right-of-way.
3. SOILS: No 58: Surprise coarse sandy loam, 2-4% slopes.
4. EARTHQUAKE: Zone II (Moderate shaking potential); a questionable fault is found within 500 feet to the west of the site.

SITE DEVELOPMENT INFORMATION

1. SPECIAL DISTRICTS/AREAS: None
2. PARCEL AREA: 21,824 square feet (0.50 acres)
3. EXISTING LAND USE: Single Family Dwelling
4. PRIMARY BUILDING: 1,769 square feet
5. EXISTING DETACHED GARAGE BUILDING: 576 square feet
6. EXISITNG SHEDS (2): 48 square feet and 96 square feet

7. PROPOSED DETACHED BUILDING: 840 square feet
8. RELATIVE TO PRIMARY BUILDING: 88 %
9. TOTAL LOT COVERAGE/ALL BUILDINGS: 15%
10. REQUIRED SETBACKS: Front: 20' Side/north:10' Side /south: 10' Rear: 20'
11. PROVIDED SETBACKS: Front: NA Side/north: ±20' Side/south: ±50' Rear: ±26'
12. VARIANCES REQUESTED: None.

DISCUSSION:

Intent of the Single Family 12,000. CCMC 18.04.065 states:

- The purpose of the SF6 and SF12 Districts is to provide for the development of single family detached dwellings in a suburban setting. The SF6 and SF12 districts are consistent with the policies of the Low Density Residential category of the Master Plan.

The 0.50-acre site is located within the Single Family 12,000 zoning district. The applicant proposes to construct an 840-square-foot wood split level framed building for the purpose of storage. The applicant developed the subject property in 2002 with a single family dwelling unit. The applicant has stated that no rental of the storage space to others would occur. A recommended condition of approval has been added to reflect this for clarity.

A building permit was received in the Building Division on February 08, 2006 for the proposed garage/shed structure. The building permit was issues on June 22, 2006; the permit was revoked on July 10, 2008. The applicant re-applied for the required building permit on September 18, 2008, the permit has not been re-issued due to plan deficiencies, including the Planning Division requirement of the subject Special Use Permit.

It should be noted; initially when the subject plans were reviewed by the Planning Division, it was determined that Mr. Silsby would be required to obtain an Administrative Permit approval for the proposed structure. Mr. Silsby applied for the Administrative Permit on August 07, 2009. The Planning staff conducted a site visit on August 10, 2009 and determined that the proposed structure would require Special Use Permit approval due to cumulative size the proposed and existing accessory structures on site and the overall lot coverage noted below.

A special use permit is required for two reasons: First, required for accessory structures that are larger than 75% of the area of the primary single-family dwelling; and second, required for accessory structures on lots of 21,000 square feet or larger, where the accessory structure(s) exceed lot coverage of 5%. The applicant's proposed accessory structure (and existing accessory structures) overall square footage will be approximately 88% of the area of the primary building and will cover approximately 15% of the total lot area. Two existing sheds (see site plan) are on site in addition to the existing 1,769 square foot primary dwelling unit and a detached garage of 576 square feet.

The 14 foot by 40-foot building (14 foot by 20 foot –two story element) for a total of 840 square feet, would be constructed of wood siding on a wood frame, with a pitched composition gable roof. The overall height of the building would be 21 feet (to the ridge-line). One bay would have overhead-opening doors, six measuring 12 feet wide by 14 feet high and one measuring 12 by 12 feet; a pedestrian door would also be included. No lighting, electrical work or utilities are planned at this time, for the proposed structure. Any additional such work would require building permits and would be reviewed by City staff at that time.

In reviewing the information provided by the applicant and the required findings as identified below, the findings to grant approval of this Special Use Permit can be made. Therefore, it is recommended that the Planning Commission approve this Special Use Permit application, SUP-09-076.

PUBLIC COMMENTS: Public notices were mailed on September 04, 2009 to 30 adjacent property owners within 300 feet of the subject site pursuant to the provisions of NRS and CCMC. As of the writing of this report, one letter from an abutting property owner was received in favor of the proposed project, see attached. Any comments that are received after this report is complete will be submitted prior to or at the Planning Commission meeting, depending on their submittal date to the Planning Division.

CITY DEPARTMENT / OUTSIDE AGENCY COMMENTS: The following comments were received from City departments. Recommendations have been incorporated into the recommended conditions of approval, where applicable.

Building Division:

- This project was approved by the Carson City Building Division, as noted within the seventh combined deficiency letter, dated August 13, 2009.

Fire Department:

- Through the building plan review process, this Department has informed the applicant numerous times as to the corrections that will need to be made in ordered to meet the requirements of the Wildland Urban Interface Ordinance. As of September 1, 2009, these corrections have not been made. Until this project is in compliance, it will not be approved.

Health Department:

- Carson City Health and Human Services has no comments regarding the project as described in the packet received. The applicant must meet all applicable codes and ordinances as they apply to this request.

Parks and Recreation Department:

- The Parks Department has no comments regarding the proposed project.

Engineering Division:

- The Engineering Division has no preference or objection to the Special Use Permit. If the request is approved, then the following condition of approval is recommended:

    1. The storm-water runoff from the structure shall be directed so as to not adversely impact adjacent properties.

FINDINGS: Pursuant to CCMC18.02.080 (Special Use Permits), staff recommends approval of the Special Use Permit based on the seven required findings (in bold) below and subject to the recommended conditions of approval at the head of this report.

1. The use will be consistent with the objectives of the Master Plan elements.

The applicant maintains that the proposed project is consistent with the following applicable goals and policies (in italics) of the Master Plan:

Chapter 6: Livable Neighborhoods and Activity Centers

Goal 1.1. Promote the Efficient Use of Available Land and Resources

Policy 1.1e. Sustainable construction techniques. The proposed development will use sustainable building materials and construction techniques to promote water and energy conservation.

Policy 1.1f. Energy conservation.

The building will be constructed of block and wood, using construction techniques which will promote energy conservation. In addition, no water or sewer lines will be extended to the building.

The development of the garage will not affect mature trees or other features on the property. The proposed location of the garage is in an area of little vegetation.

Goal 6.1 Promote high quality development.

Policy 6.1a. Durable materials.

The proposed garage will be constructed of block and wood with composition roofing materials.

The building, at 21 feet tall, is below the maximum height limit in the Single Family 12,000 zoning district, which allows 26 feet. The scale and character is similar to other detached accessory buildings found in this zoning district and in the neighborhood, and it would not be unusual in terms of setbacks or lot coverage. With all buildings existing and proposed, 85% of the lot will remain open area.

2. The proposed use will not be detrimental to the use, peaceful enjoyment, economic value, or development of surrounding properties or the general neighborhood; and will cause no noise, vibrations, fumes, odors, dust, glare or physical activity.

The proposed storage building would be a low-intensity, quiet use and will not generate unusual noise, vibrations, fumes, odors, dust, glare or physical activity.

3. **The project will have little or no detrimental effect on vehicular or pedestrian traffic.**

The proposed storage building would house personal property. These types of equipment will have very little impact on traffic, since they are not often moved.

4. **The project will not overburden existing public services and facilities, including schools, police and fire protection, water, sanitary sewer, public roads, storm drainage and other public improvements.**

The proposed storage building would not affect schools, or any of these public improvements.

5. **The project meets the definition and specific standards set forth elsewhere in this Title [18] for such particular use and meets the purpose statement of that district.**

The parcel is zoned Single Family 12,000, and the proposal does not conflict with the intent of this district. Upon approval of the Special Use Permit with the recommended conditions of approval, the proposal would be in conformance with the requirements of Title 18 of the Carson City Municipal Code and related Development Standards, with the exceptions that are the subject of this request.

6. **The project will not be detrimental to the public health, safety, convenience and welfare.**

City staff has reviewed the special use permit application, the site plan, has inspected the property and has determined that the proposed storage building will be required to meet all applicable City codes and Development Standards. Construction will require building permit review, approval and inspections. Construction of the detached building will therefore not be detrimental to the public health, safety, convenience and welfare.

7. The project will not result in material damage or prejudice to other property in the vicinity.

Surrounding property owners were notified of the request and no objections have been registered. Because similar detached accessory buildings exist in the area, approval of this application should not result in material damage or prejudice to any property in the vicinity.

Respectfully submitted,

PUBLIC WORKS DEPARTMENT, PLANNING DIVISION

Jennifer Pruitt

Jennifer Pruitt, AICP, LEED AP
Principal Planner

Attachments:
- Application (SUP-09-076)
- Building Division comments
- Engineering Division comments
- Fire Department comments
- Health Department comments
- Parks and Recreation Comments

File # (Ex: MPR #07-111)	*SUP 09-076*
Brief Description	*Combined acc. structures greater than 50%*
Project Address or APN	*2642 Boyles Street*
Bldg Div Plans Examiner	*Don Wilkins*
Review Date	*Sept 11, 2009*
Total Spent on Review	

BUILDING DIVISION COMMENTS:

NOTE: These comments do not constitute a complete plan review, but are merely observations based on the information provided.

SCOPE OF APPLICATION:

This project involves the construction of an accessory structure, when combined with the area of the other accessory structures onsite, exceeds 50% of the area of the primary dwelling onsite.

GENERAL PLAN SUBMITTAL COMMENTS:

1. This project was approved by the Carson City Building Division, as noted within the seventh combined deficiency letter, dated August 13, 2009

MEMORANDUM

TO: Community Development

FROM: Duane Lemons, Fire Inspector

DATE: September 9, 2009

SUBJECT: AGENDA ITEMS FOR SEPTEMBER 14, 2009 PLANNING COMMISSION MEETING

We reviewed the agenda items for the September 14, 2009 Planning Commission Meeting and have the following comments:

- VAR-09-071 Aurelio Acebedo We have no concerns with the applicant's request.
- TSM-09-063 Ltd Partnership Management Service, LLC We have no concerns with the applicant's request.
- SUP-09-064 Ltd Partnership Management Service, LLC We have no concerns with the applicant's request.
- VAR-09-065 Ltd Partnership Management Service, LLC We have no concerns with the applicant's request.
- SUP-09-074 Western States Storage We have no concerns with the applicant's request.
- ZCA-09-072 Carson City Planning Division
- SUP-09-075 Costco Wholesale - The applicant will be required to comply with all codes and ordinances as they relate to this request.
- SUP-09-076 Ed Silsby Through the building plan review process, this Department has informed the applicant numerous times as to the corrections that will need to be made in ordered to meet the requirements of the Wildland Urban Interface Ordinance. As of September 1, 2009, these corrections have not been made. Until this project is in compliance, it will not be approved.

DL/llb

CARSON CITY, NEVADA

CONSOLIDATED MUNICIPALITY AND STATE CAPITAL

RECEIVED
SEP 2 1 2009
CARSON CITY
PLANNING DIVISION

MEMORANDUM

TO: Lee Plemel, Planning Director
Jennifer Pruitt, Senior Planner (Hardcopy and Email)

FROM: Roger Moellendorf, Parks and Recreation Director
Vern L. Krahn, Park Planner

DATE: September 18, 2009

SUBJECT: Parks and Recreation Department's comments for the Wednesday, September 30, 2009, Planning Commission meeting.

TSM-09-063 SUP-09-064 VAR-09-065	The Open Space Advisory Committee will be reviewing the proposed Lakeview Gated Estates development at its September 28, 2009 meeting. After this meeting, Parks and Recreation Department staff will prepare a memorandum outlining issues addressed by the Committee. In addition, Parks and Recreation Department staff will be at the Planning Commission meeting to answer any questions.
VAR-09-071	No comments.
SUP-09-074	No comments.
SUP-09-075	No comments.
SUP-09-076	No comments.

CARSON CITY, NEVADA

CONSOLIDATED MUNICIPALITY AND STATE CAPITAL
DEVELOPMENT SERVICES

Engineering Division
Planning Commission Report
File Number SUP 09-076

TO: Planning Commission

FROM Jeff Sharp, P.E. – City Engineer

DATE: Sept 22, 2009 **MEETING DATE:** Sept 30, 2009

SUBJECT TITLE:

Action to consider an application for a Special Use Permit from Ed Silsby for an accessory structure on property zoned SF12000 located at 2642 Boyle Street, APN 009-041-02.

RECOMMENDATION:

The Engineering Division has no preference or objection to the special use request. If the request is approved, then the following conditions of approval are recommended.

Engineering Division Requirements:

1. The stormwater runoff from the structure shall be directed so as to not adversely impact adjacent properties.

DISCUSSION:

The Engineering Division has reviewed the conditions of approval within our areas of purview relative to adopted standards and practices and to the provisions of CCMC 18.02.080, Conditional Uses.

CCMC 18.02.080 (2a) - Adequate Plans
The information submitted by the applicant is adequate for this analysis.

CCMC 18.02.080 (5a) - Master Plan
The request is not in conflict with any Engineering Master Plans for streets or storm drainage.

CCMC 18.02.080 (5c) - Traffic/Pedestrians
The proposal will have little effect on traffic or pedestrian facilities.

CCMC 18.02.080 (5d) - Public Services
The proposal will have little effect on existing public services.

H:\EngDept\P&ESHARE\Engineering\Planning Commission Reports\Special Use Permits\2009\SUP 09-076 Shed 2642 Boyle, apn 009-041-02.doc

ENGINEERING DIVISION • 2621 Northgate Lane, Suite 54 • Carson City, Nevada 89706
Phone: (775) 887-2300 Fax: (775) 887-2283 E-mail: engdiv@ci.carson-city.nv.us

From: Teresa Hayes
To: MPR Committee
Date: 09/03/2009 4:16 PM
Subject: Planning Cmmission Sept 30

VAR 09-071

Carson City Health and Human Services has no comments regarding the project as described in the packet received. The applicant must meet all applicable codes and ordinances as they apply to this request.

SUP 09-074
Carson City Health and Human Services has no comments regarding the project as described in the packet received. The applicant must meet all applicable codes and ordinances as they apply to this request.

SUP 09-075
Carson City Health and Human Services has no comments regarding the project as described in the packet received, so as long as the scope of products placed outside do not include food products. If food products are to be stored in this location approval should be obtained on a case-by-case basis from Environmental Health. The applicant must meet all applicable codes and ordinances as they apply to this request.

SUP 09-076
Carson City Health and Human Services has no comments regarding the project as described in the packet received. The applicant must meet all applicable codes and ordinances as they apply to this request.
Teresa Hayes, R.E.H.S.
Environmental Health Specialist II
Carson City Health and Human Services
900 E. Long St
Carson City, NV 89706
Phone: (775) 887-2190 ext 30227
Fax: (775) 887-2248

Go Green: Please do not print this e-mail unless you really need to!
Confidentiality Notice: This email message, including any attachments, may contain privileged and confidential information for the sole use of the intended recipient(s). If the reader of this message is not the intended recipient, any unauthorized review, dissemination, distribution, or copying of this email message is strictly prohibited. If you have received and/or are viewing this email in error, please notify the sender immediately by reply email and delete this email from your system

18 September 2009

RECEIVED
SEP 21 2009
CARSON CITY
PLANNING DIVISION

Carson City Planning Division
2621 Northgate Lane - Ste. 62
Carson City, NV 89706

SUBJECT: Special Use Permit FILE NO. SUP-09-076*

Please advised that as an abutting neighbor to Mr. Silsby's property –

We raise no objection to the Subject Request for a Special Use Permit –

Sincerely.

Otto R. Kossmann Sally A. Kossmann

K Mr. Otto Kossman
2656 Boyle St.
Carson City, NV 89703

City Planning Division
Northgate Lane, Suite 62 · Carson City NV 89706
ne: (775) 887-2180 · E-mail: plandept@ci.carson-city.nv.us

FOR OFFICE USE ONLY:

RECEIVED
AUG 20 2009
CARSON CITY
PLANNING DIVISION

CCMC 18.02

SPECIAL USE PERMIT

FILE # SUP - 09 - 076

FEE: $2,450.00 MAJOR
$2,200.00 MINOR (Residential zoning districts)
+ noticing fee and CD containing application digital data (all to be submitted once the application is deemed complete by staff)

SUBMITTAL PACKET
- ☐ 6 Completed Application Packets (1 Original + 5 Copies) including:
- ☐ Application Form
- ☐ Site Plan
- ☐ Building Elevation Drawings and Floor Plans
- ☐ Proposal Questionnaire With Both Questions and Answers Given
- ☐ Applicant's Acknowledgment Statement
- ☐ Documentation of Taxes Paid-to-Date (1 copy)
- ☐ Project Impact Reports (Engineering) (4 copies)

Application Reviewed and Received By:

Submittal Deadline: See attached PC application submittal schedule.
Note: Submittals must be of sufficient clarity and detail such that all departments are able to determine if they can support the request. Additional Information may be required.

PROPERTY OWNER ED SILSBY

MAILING ADDRESS, CITY, STATE, ZIP 2642 Boyle St. Carson City, NV. 89706

PHONE # 882-9144 FAX #

Name of Person to Whom All Correspondence Should Be Sent
APPLICANT/AGENT (same)

MAILING ADDRESS, CITY, STATE ZIP

PHONE # FAX #

E-MAIL ADDRESS

Project's Assessor Parcel Number(s):	Street Address / ZIP Code	
009-041-02	2642 BOYLE ST Carson City NV. 89706	
Project's Master Plan Designation	**Project's Current Zoning**	**Nearest Major Cross Street(s)**
MDR	12000 sf.	South Curry St.

Briefly describe your proposed project: (Use additional sheets or attachments if necessary). In addition to the brief description of your project and proposed use, provide additional page(s) to show a more detailed summary of your project and proposal. In accordance with Carson City Municipal Code (CCMC) Section: 18.05.055.7+8, or Development Standards, Division _____, Section _____, a request to allow as a conditional use is as follows:

STORAGE SHED ~~560 sf.~~ 840 sf

PROPERTY OWNER'S AFFIDAVIT

I, ED SILSBY, being duly deposed, do hereby affirm that I am the record owner of the subject property, and that I have knowledge of, and I agree to, the filing of this application.

Signature [signature] Address 2642 Boyle St Date 8-20-09

Use additional page(s) if necessary for other names.

STATE OF NEVADA
COUNTY of Carson

On August 20, 2009, Edward Silsby, personally known (or proved) to me to be the person whose name is subscribed to the foregoing document and who acknowledged to me that he/she executed the foregoing document.

Notary Public [signature]

CHARLES DRIVER
Notary Public State of Nevada
Appointment Number: 07-1146-12
My Appointment Expires: January 26, 2011

NOTE: If your project is located within the historic district, airport area, or downtown area, it may need to be scheduled before the Historic Resources Commission, the Airport Authority, and/or the Redevelopment Authority Citizens Committee prior to being scheduled for review by the Planning Commission. Planning personnel can help you make the above determination.

Special USE Permit
Application Questionnaire
ED SILSBY 2642 Boyle St.

Question 1: How will the proposed development further & be in keeping with & not contrary to, th goals of the Master Plan elements?

I took extra measure to preserve the natural surroundings. I preserved most of the natural vegetation and wildlife habitat, only clearing enough for the storage shed and defensible spac in the event of a wildfire. This proved effectiv in 2004 when wild fire came to the property line I was commended by the firefighting teams that were here at that time. The landscaping here is totally natural to the area. I hired an engineering firm that specializes in flood prevention in the design of the drainage around the property as well. Water conservation is always of concern to me. The proposed storage shed will not require any water. I plan to use top quality materials and design.

Question 2: WILL the effect of the proposed development be detrimental to the immediate vicinity? To the general neighborhood?

A. Land uses, zoning: subject property: storage shed 560 sf. South & North single family 12,000 s East single family 12000 sf. West Undeveloped land.

B. This project is a small ~~560~~ 840 sf. Storage Shed No activities will be conducted outside the Shed. There will be no dust created during construction C.D.E. I feel that this project will not be at all detrimental to the existing neighborhood. There will be no effect on the vehicle traffic in the area or pedestrian traffic.

I feel that the long range benefit of this project is the increased value of the property as it is now. The project will not involve any uses that are not contained within a building. Storage all uses will be within a building. My neighbor obtained approval of a similar request. My project will not differ in appearance from my neighbors.

C. Storage Shed

D. There will be no effect on vehicle traffic in the area or pedestrian traffic. Emergency vehicle response time is very good Reno Fire Department Waterfall wildfire.

Carson City Building Department.

There will be no effect of existing traffic in the area. Concerning exsting traffic in the area.

E. I feel that the long range benefit of this project is the increased value of the property as it is now.

Question 3) Has sufficient consideration been exercised by the applicant in adapting the project to existing improvements in the vicinity?

A. This project will have no effect on the school district, as there are no school age children in the household, not as there be in my lifetimes. I can see no effect on the Sheriff's Dept. This property is easily accessible to any emergency services. During the fire in the summer of 2004, this property was used as a sort of base for firefighting teams. There is plenty of parking and area to maneuver large vehicles.

B. This project will not require any compacting or any paving.

C. The water pressure here is adequate for my needs. The service from the meter and all existing plumbing was installed in 2002. This property is served by Carson City Utilites.

D. This property is on septic system, also installed in 2002. It is a 1000 gallon tank. (information is on file with Carson City Health & Human services and was recently updated for my home at 2642 Boyle St. Contact Teresa Hayes) This system was based on the usage of an average family of four. ~~Since~~ I know that you can only have one residence on the quarter acre of land.

E.F. No road improvements will be necessary to accommodate this project. This is very little traffic in the area.

G. No out door lighting is planned!

H. The exisiting landscaping will serve this project

I. There will be no parking planned.

ACKNOWLEDGMENT OF APPLICANT

I certify that the forgoing statements are true and correct to the best of my knowledge and belief. I agree to fully comply with all conditions as established by the Planning Commission. I am aware that this permit becomes null and void if the use is not initiated within one-year of the date of the Planning Commission's approval; and I understand that this permit may be revoked for violation of any of the conditions of approval. I further understand that approval of this application does not exempt me from all City code requirements.

Applicant

AUGUST 19, 2009

Date

Master Plan Policy Checklist

Special Use Permit, Major Project Review & Administrative Permits

PURPOSE

The purpose of a development checklist is to provide a list of questions that address whether a development proposal is in conformance with the goals and objectives of the 2006 Carson City Master Plan that are related to non-residential and multi-family residential development. This checklist is designed for developers, staff, and decision-makers and is intended to be used as a guide only.

Development Name: _____

Reviewed By: _____

Date of Review: _____

DEVELOPMENT CHECKLIST

The following five themes are those themes that appear in the Carson City Master Plan and which reflect the community's vision at a broad policy level. Each theme looks at how a proposed development can help achieve the goals of the Carson City Master Plan. A check mark indicates that the proposed development meets the applicable Master Plan policy. The Policy Number is indicated at the end of each policy statement summary. Refer to the Comprehensive Master Plan for complete policy language.

CHAPTER 3: A BALANCED LAND USE PATTERN

The Carson City Master Plan seeks to establish a balance of land uses within the community by providing employment opportunities, a diverse choice of housing, recreational opportunities, and retail services.

Is or does the proposed development:

- ☑ Meet the provisions of the Growth Management Ordinance (1.1d, Municipal Code 18.12)?
- ☑ Use sustainable building materials and construction techniques to promote water and energy conservation (1.1e, f)?
- ☐ Located in a priority infill development area (1.2a)?
- ☐ Provide pathway connections and easements consistent with the adopted Unified Pathways Master Plan and maintain access to adjacent public lands (1.4a)?
- ☑ Protect existing site features, as appropriate, including mature trees or other character-defining features (1.4c)?

- ☐ At adjacent county boundaries or adjacent to public lands, coordinated with the applicable agency with regards to compatibility, access and amenities (1.5a, b)?
- ☐ In identified Mixed-Use areas, promote mixed-use development patterns as appropriate for the surrounding context consistent with the land use descriptions of the applicable Mixed-Use designation, and meet the intent of the Mixed-Use Evaluation Criteria (2.1b, 2.2b, 2.3b, Land Use Districts, Appendix C)?
- ☑ Meet adopted standards (e.g. setbacks) for transitions between non-residential and residential zoning districts (2.1d)?
- ☑ Protect environmentally sensitive areas through proper setbacks, dedication, or other mechanisms (3.1b)?
- ☐ Sited outside the primary floodplain and away from geologic hazard areas or follows the required setbacks or other mitigation measures (3.3d, e)?
- ☐ Provide for levels of services (i.e. water, sewer, road improvements, sidewalks, etc.) consistent with the Land Use designation and adequate for the proposed development (Land Use table descriptions)?
- ☑ If located within an identified Specific Plan Area (SPA), meet the applicable policies of that SPA (Land Use Map, Chapter 8)?

CHAPTER 4: EQUITABLE DISTRIBUTION OF RECREATIONAL OPPORTUNITIES

The Carson City Master Plan seeks to continue providing a diverse range of park and recreational opportunities to include facilities and programming for all ages and varying interests to serve both existing and future neighborhoods.

Is or does the proposed development:

- ☐ Provide park facilities commensurate with the demand created and consistent with the City's adopted standards (4.1b)?
- ☐ Consistent with the Open Space Master Plan and Carson River Master Plan (4.3a)?

CHAPTER 5: ECONOMIC VITALITY

The Carson City Master Plan seeks to maintain its strong diversified economic base by promoting principles which focus on retaining and enhancing the strong employment base, include a broader range of retail services in targeted areas, and include the roles of technology, tourism, recreational amenities, and other economic strengths vital to a successful community.

Is or does the proposed development:

- ☐ Encourage a citywide housing mix consistent with the labor force and non-labor force populations (5.1j)
- ☐ Encourage the development of regional retail centers (5.2a)
- ☐ Encourage reuse or redevelopment of underused retail spaces (5.2b)?
- ☐ Support heritage tourism activities, particularly those associated with historic resources, cultural institutions and the State Capitol (5.4a)?
- ☐ Promote revitalization of the Downtown core (5.6a)?

- ☐ Incorporate additional housing in and around Downtown, including lofts, condominiums, duplexes, live-work units (5.6c)?

CHAPTER 6: LIVABLE NEIGHBORHOODS AND ACTIVITY CENTERS

The Carson City Master Plan seeks to promote safe, attractive and diverse neighborhoods, compact mixed-use activity centers, and a vibrant, pedestrian-friendly Downtown.

Is or does the proposed development:

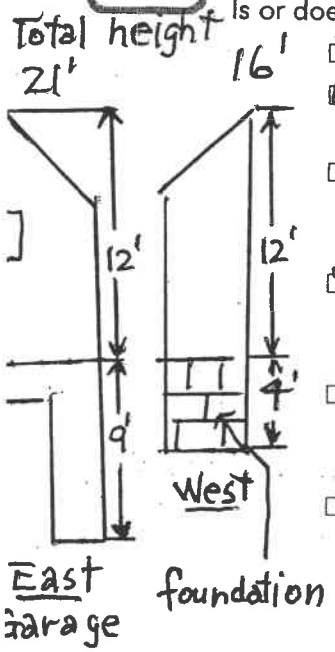

- ☑ Use durable, long-lasting building materials (6.1a)?
- ☑ Promote variety and visual interest through the incorporation of varied building styles and colors, garage orientation and other features (6.1b)?
- ☐ Provide variety and visual interest through the incorporation of well-articulated building facades, clearly identified entrances and pedestrian connections, landscaping and other features consistent with the Development Standards (6.1c)?
- ☑ Provide appropriate height, density and setback transitions and connectivity to surrounding development to ensure compatibility with surrounding development for infill projects or adjacent to existing rural neighborhoods (6.2a, 9.3b 9.4a)?
- ☐ If located in an identified Mixed-Use Activity Center area, contain the appropriate mix, size and density of land uses consistent with the Mixed-Use district policies (7.1a, b)?
- ☐ If located Downtown:
  - o Integrate an appropriate mix and density of uses (8.1a, e)?
  - o Include buildings at the appropriate scale for the applicable Downtown Character Area (8.1b)?
  - o Incorporate appropriate public spaces, plazas and other amenities (8.1d)?
- ☐ Incorporate a mix of housing models and densities appropriate for the project location and size (9.1a)?

CHAPTER 7: A CONNECTED CITY

The Carson City Master Plan seeks promote a sense of community by linking its many neighborhoods, employment areas, activity centers, parks, recreational amenities and schools with an extensive system of interconnected roadways, multi-use pathways, bicycle facilities, and sidewalks.

Is or does the proposed development:

- ☐ Promote transit-supportive development patterns (e.g. mixed-use, pedestrian-oriented, higher density) along major travel corridors to facilitate future transit (11.2b)?
- ☐ Maintain and enhance roadway connections and networks consistent with the Transportation Master Plan (11.2c)?
- ☐ Provide appropriate pathways through the development and to surrounding lands, including parks and public lands, consistent with the Unified Pathways Master Plan (12.1a, c)?

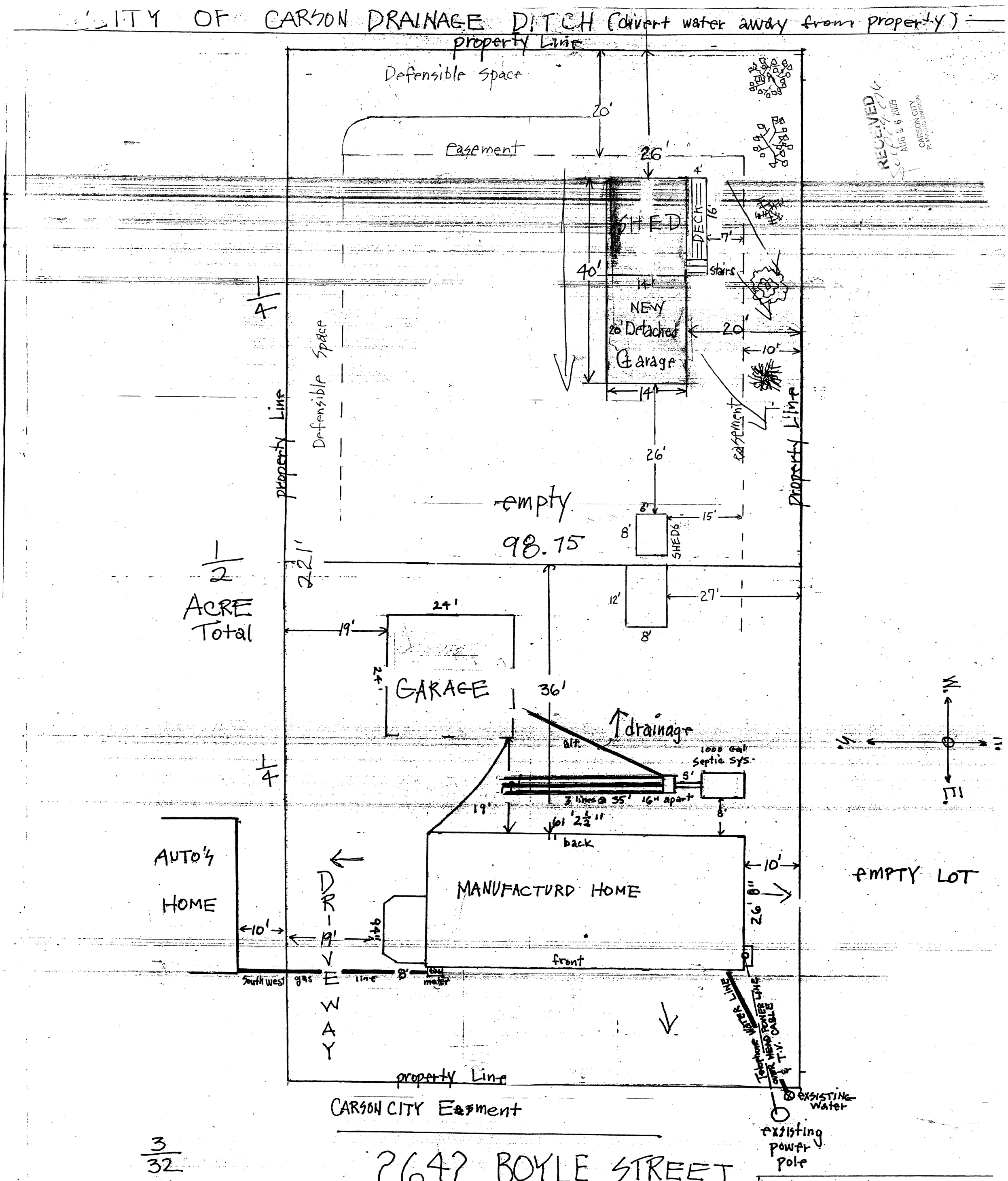
CITY OF CARSON DRAINAGE DITCH (divert water away from property)
property Line
Defensible Space
20'
Easement
26'
4'
SHED
DECK
16'
7'
stairs
40'
14'
NEW
26' Detached
Garage
20'
10'
14'
26'
Easement
Property Line
Defensible Space
Property Line
empty
98.75
8'
15'
8'
SHEDS
1/2
ACRE
Total
22'
12'
27'
8'
24'
19'
24'
GARAGE
36'
drainage
alt.
1000 gal
Septic sys.
5'
3 lines @ 35' 16" apart
19'
8'
61' 2 1/2"
back
AUTO'S
HOME
10'
DRIVEWAY
MANUFACTURD HOME
10'
EMPTY LOT
26' 8"
10'
19'
4'
front
South west gas line
8'
meter
Telephone WATER LINE
Cable TV
Power POLE LINE
existing water
existing power pole
property Line
CARSON CITY Easement
1/4
1/4
W
E
N
S
3/32
scale
2642 BOYLE STREET
Ed Silsby 882-9144
2642 BOYLE ST.
SHED 2642 BOYLE ST CC.NV. 89706
ED SILSBY owner-builder
10-23-08
560

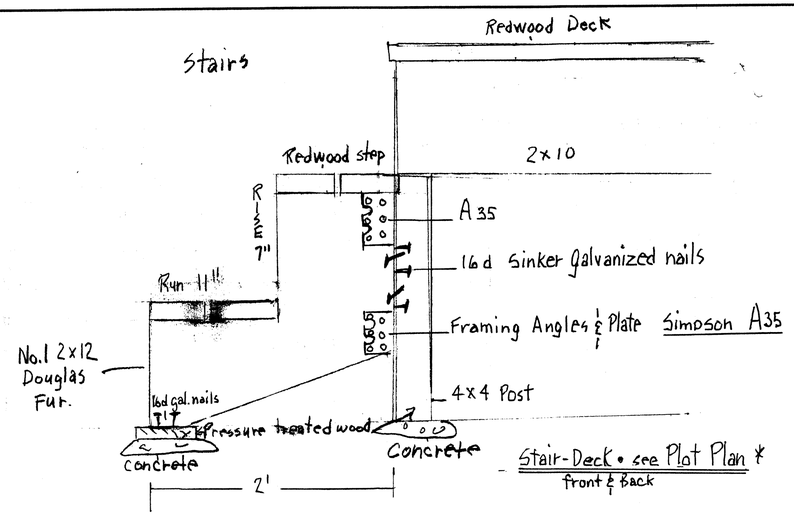

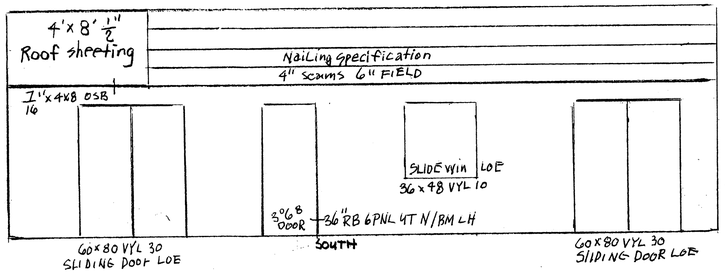

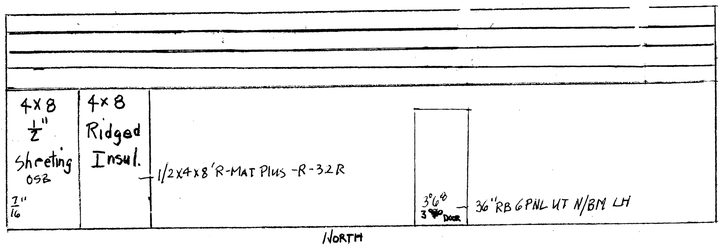

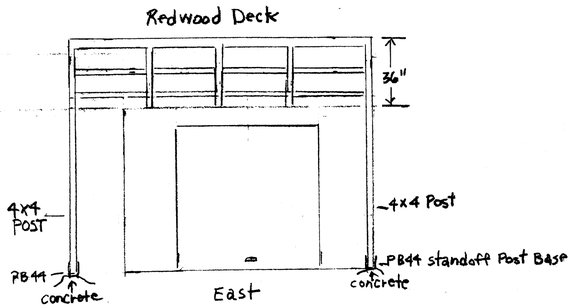

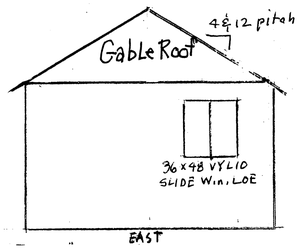

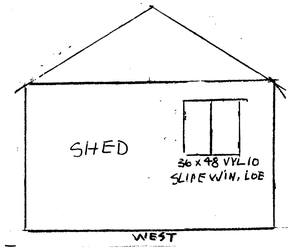

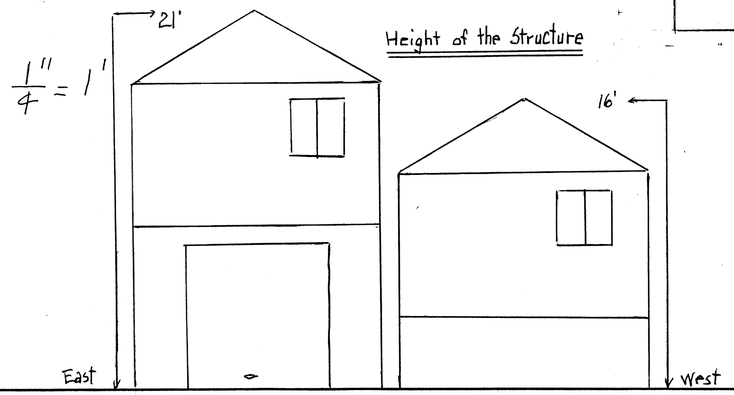

SHED 2692 Boyle St. Carson City NV. 89706
560 ☒

SCALE 1/4" = 1'	APPROVED BY:	DRAWN BY ED SILSBY
DATE 8-7-09		REVISED
		DRAWING NUMBER

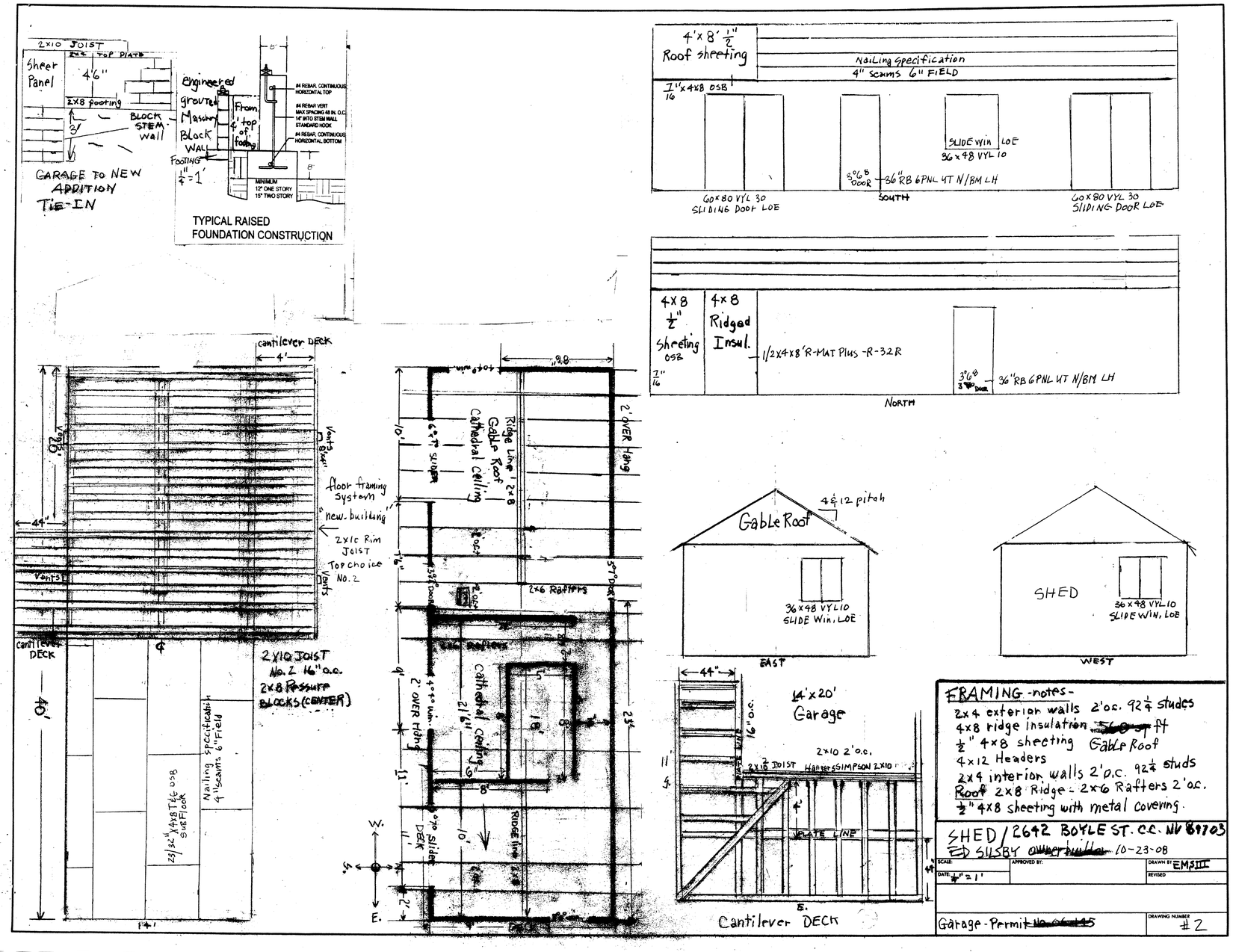
2x10 JOIST
2x6 TOP PLATE
Sheer Panel
4'6"
2x8 footing
BLOCK STEM wall
3'
GARAGE TO NEW ADDITION TIE-IN
Engineered grouted Masonry Block WALL
From 4' top of footing
FOOTING 1/4" = 1'
#4 REBAR, CONTINUOUS HORIZONTAL TOP
#4 REBAR VERT MAX SPACING 48 IN. O.C. 14" INTO STEM WALL STANDARD HOOK
#4 REBAR, CONTINUOUS HORIZONTAL BOTTOM
MINIMUM 12" ONE STORY 15" TWO STORY
TYPICAL RAISED FOUNDATION CONSTRUCTION
4'x8' 1/2" Roof sheeting
Nailing specification
4" seams 6" FIELD
7/16"x4x8 OSB
SLIDE WIN LOE
36x48 VYL 10
3'0"8 DOOR
36" RB 6PNL UT N/BM LH
60x80 VYL 30 SLIDING DOOR LOE
SOUTH
60x80 VYL 30 SLIDING DOOR LOE
4x8 1/2" Sheeting OSB
7/16"
4x8 Ridged Insul.
1/2x4x8' R-MAT Plus -R-32R
3'0"8 DOOR
36" RB 6PNL UT N/BM LH
NORTH
cantilever DECK
4'
floor framing system
new building
2x10 Rim Joist Top choice No. 2
Vents
44'
40'
cantilever DECK
2x10 JOIST No. 2 16" o.c.
2x8 PRESSURE BLOCKS (CENTER)
23/32" x 4x8 T&G OSB SUBFLOOR
Nailing specification 4" seams 6" Field
14'
Ridge Line 2x8
Cathedral Gable Roof Cathedral ceiling
2' OVER Hang
6'0" SLIDER
2x6 Rafters
5'0" DOOR
2' OVER Hang
Cathedral ceiling
16'
23'
RIDGE line
6'0" Slider DECK
W.
S.
E.
4/12 pitch
Gable Roof
36x48 VYL10 SLIDE WIN. LOE
EAST
SHED
36x48 VYL10 SLIDE WIN. LOE
WEST
44"
14'x20' Garage
16" o.c.
2x10 2' o.c.
2x10 JOIST
HARDY SIMPSON 2x10
PLATE LINE
Cantilever DECK
FRAMING-notes-
2x4 exterior walls 2' o.c. 92 1/4 studs
4x8 ridge insulation
1/2" 4x8 sheeting Gable Roof
4x12 Headers
2x4 interior walls 2' o.c. 92 1/4 studs
Roof 2x8 Ridge - 2x6 Rafters 2' o.c.
1/2" 4x8 sheeting with metal covering.
SHED / 2642 BOYLE ST. C.C. NV 89703
SILSBY 10-23-08
SCALE
APPROVED BY:
DRAWN BY EMSIII
DATE 1/4" = 1'
REVISED
Garage-Permit
DRAWING NUMBER #2

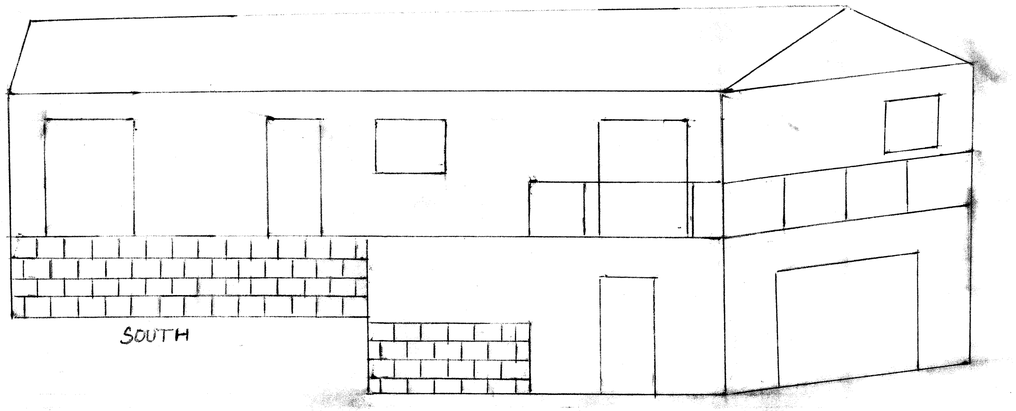

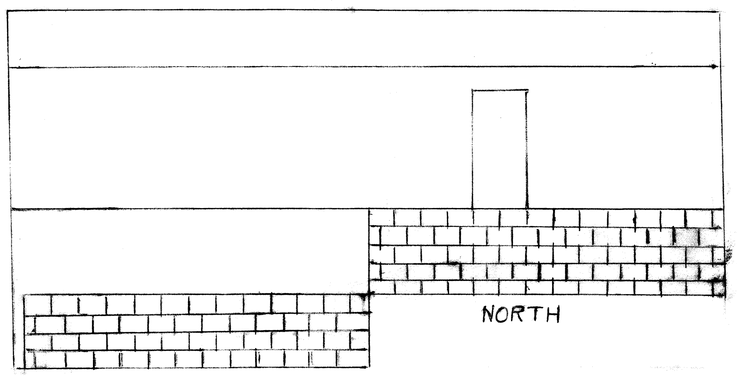

SHED ED SILSBY 2642 BOYEE ST.
GC. NV 89703

SCALE 1/4" to 1'	APPROVED BY:	DRAWN BY E. SILSBY
DATE 8-26-09		REVISED
		DRAWING NUMBER

PLAN KEY NOTES

1. SET BEAM IN CB66, CENTER ON CMU WALL
2. TIE DBL STUD IN SW ABOVE TO BM5 WITH MST148 BENT INTO A "U" SHAPE AROUND BM5, NAIL TO EA SIDE OF BM AND DOUBLE STUD
3. 2x10 JOIST ADJACENT TO (E) RIM, NAIL WITH 16d @ 6" STAGGERED. LOCATE 2X10 PT DF UNDER 2x10 AND FASTEN TOGETHER WITH LTP4 @ 16". FASTEN 2X10 PT TO SIDE OF (E) CMU WALL W/ TITEN 1/4"x3" SCREWS @ 12", STAGGERED.
4. FASTEN EA PLY OF BM6 TO BM7 W/ (2) SDS1/4x6 LOCATED 3" FROM OUTSIDE VERTEX, AS SHOWN
5. MIN (4) 2x4 STUDS UNDER BM6, NAIL W/ 16d @ 12" EA
6. U28 HANGERS, TYP
7. GUARD RAIL BY OTHERS, CONFORM TO THE REQUIREMENTS OF THE IBC.
8. NAIL SOLE PLATE IINTO SHEATHING AND INTO BEAM WITH PN PER SE SCHD.
9. 4x4 POSTS W/ (2) ACE4 TOP (AT 45 DEG CORNER MITER CUT THE BEAMS AND USE ONE ACE4 FOR EACH
10. 4x4 POSTS W/ PBS44. 16" DIAM FTG, MIN 24" INTO GRADE AND MIN 7" ABOVE GRADE, OR 1" ABOVE SLAG ON GRADE

BEAM SCHEDULE

BM1 (2) 1 3/4"x9 1/4" LVL, GLUE AND NAIL TOGETHER W/ 16d @ 8", STAGGERED.

BM2 2x8 RIDGE BOARD W/ (2) 2x8 BELOW 2x4 UNDER RIDGE BM AND NAIL W/ 16d @ 12", FROM EA SIDE.

BM3 3 1/2"x9 1/4" LVL, BEVEL TOP TO MATCH TOP OF 2x6 RAFTERS OVER WALL. FASTEN TO TOP PL W/ BC44

BM4 TYPICAL HEADER AT ROOF, 4x8 W/ ST, DK FOR SPANS UNDER 5'-0", USE ST, SK

BM5 2x10 DF NO 2 JSTS @ 16", OR DF NO 1 @ 24"

BM6 2x8 CANTILEVER DECK JOISTS, GLUE AND NAIL TO SIDE OF 2x10 JOISTS WITH 16d @ 8" TOP AND BTM.

BM7 6x10 DF NO 1 FLR BEAM UNDER SW AND CL2

BM8 (2) 2x10

BM9 4x10 DECK BEAM, H1 TO EA DECK JOIST

BM10 2x6 RAFTES @ 24". FASTEN TO RIDGE BOARD WITH (2) 16d TOE NAIL OR FACE NAIL. FASTEN TO 2x8 BELOW W/ 16d TOE NAIL

BM11 (4) 4x12 GARAGE DOOR HEADER, DT, SK

COLUMN SCHEDULE

CL1 (3) 2x4 STUDS, CONTINUOUS TO FLOOR, NAIL TOGETHER WITH 16d @ 12" FROM EA SIDE. ONE AT CENTER UNDER RIDGE BD AND ONE UNDER EA 2x8 EITHER SIDE. FATESEN LTP4 ON EA SIDE TO THE LOWER 2x8'S

CL2 (3) 2x4 STUDS, CONTINUOUS TO FLOOR, NAIL TOGETHER WITH 16d @ 12" FROM EA SIDE. ONE AT CENTER UNDER RIDGE BD AND ONE UNDER EA 2x8 EITHER SIDE. FATESEN LTP4 ON EA SIDE TO THE LOWER 2x8'S

CL3 (3) 2x4 STUDS, CONTINUOUS TO BM3 NAIL TOGETHER WITH 16d @ 12" FROM EA SIDE. ONE AT CENTER UNDER RIDGE BD AND ONE UNDER EA 2x8 EITHER SIDE. FATESEN LTP4 ON EA SIDE TO THE LOWER 2x8'S FASTEN TO TOP OF BM3 W/ BC44

TYP PLAN NOTES

TYPICAL EXTERIOR WALLS TO BE 2x4 @ 24"oc (MAX) WITH DBL TOP PLATES AND SINGEL SOLE PLATE. AT FOUNDATION USE 3x6 PT DF.

TYPICAL EXTERIOR WALL CONSTRUCTION PER P1, UNO

FLOOR SHEATHING TO BE 3/4" STURD-I-FLOOR, GLUE AND NAIL WITH 10d RING OR SCREW SHANK, BN=EN=6", FN=10", BLK'G NOT REQ.

TYP LAP OF TOP PLATE PER DTL 202, TS1

TYP ROOF FASTENEING ZONES PER DTL 204

ROOF SHEATHING TO BE MIN 1/2" PLY OR OSB (32/16), EXPOSURE I NAIL WITH 8d, EN=BN=6", FN=12", BLK'G NOT REQ.

P1 / SW4 — SHEAR WALL SYMBOL, SEE DT104 FOR SCHEDULE AND DTL 103 FOR WALL CONSTRUCTION

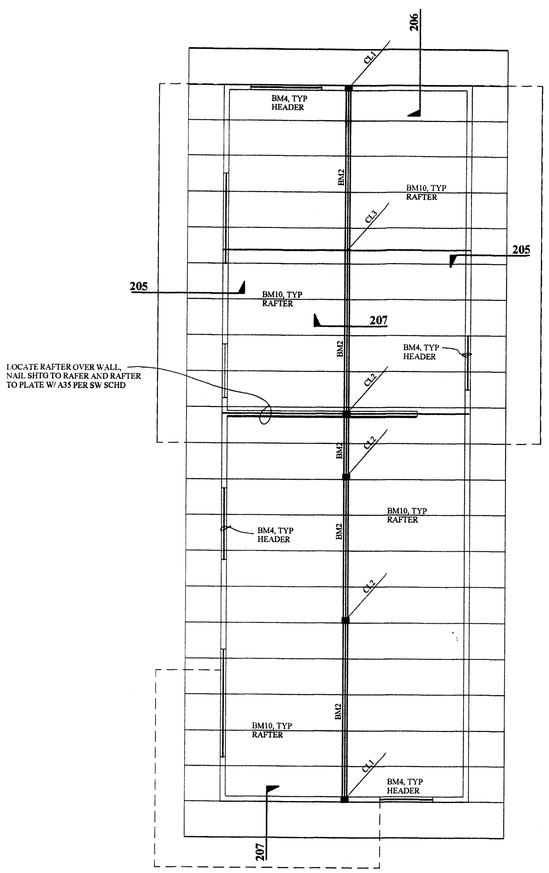

ROOF FRAMING

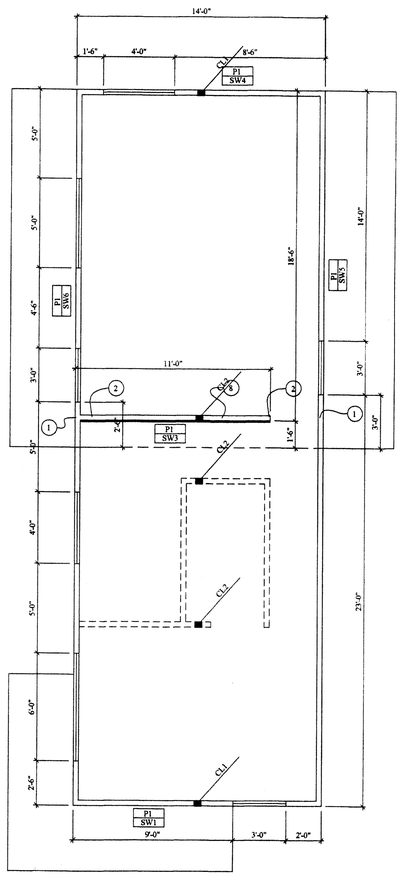

FLOOR PLAN - SW LOCATION

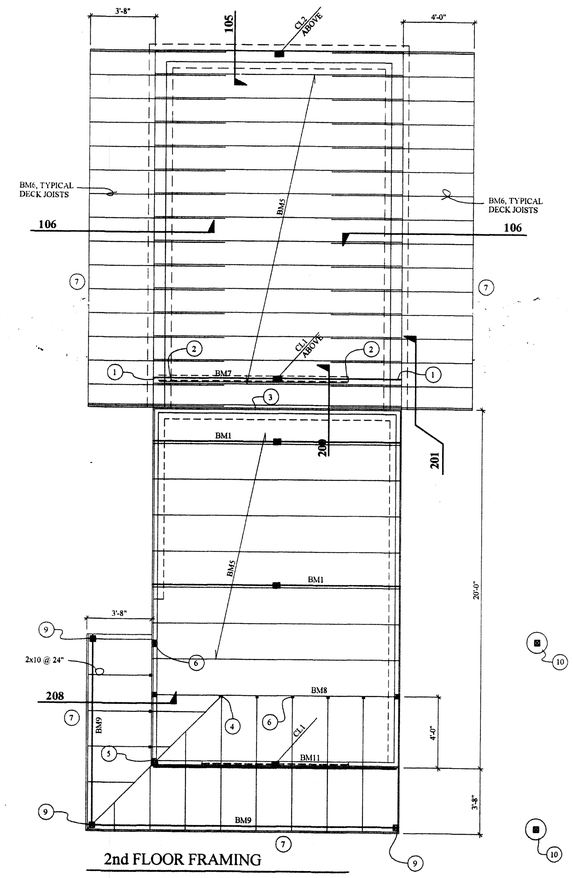

2nd FLOOR FRAMING

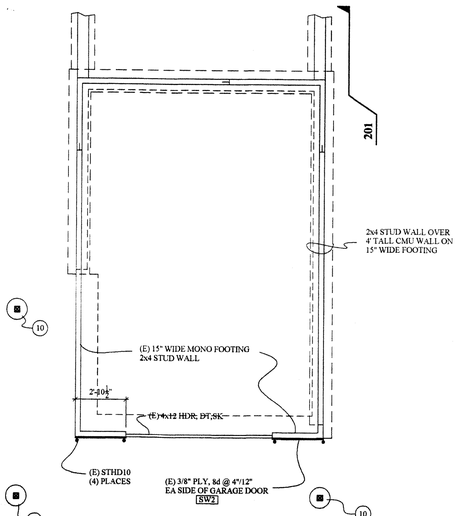

(E) GARAGE CONSTRUCTION

(ORIGINALLY INTENDED FOR 2ND STORY)

WAYNE H. REID, S.E.
STRUCTURAL ENGINEER
2205 ARROWHEAD DR. STE. A
CARSON CITY, NV 89706
(775) 230-2747

GARAGE / SHED ADDITION
ED SILSBY
2642 BOYLE ST.
CARSON CITY, NV

009-041-02 8/7/09 Corrections

2642 Boyle St 08-965 7/14/09 Corrections to

REGISTERED PROFESSIONAL ENGINEER WAYNE H. REID STRUCTURAL STATE OF NEVADA 6557 CIVIL

EXP 12/30/09
DATE 2/10/12
STRUCTURAL STRENGTH ONLY

SCALE	1/4" = 1'-0" UNO
PROJECT	
DATE	291156
DRAWN BY	7/8/2009
CHECKED BY	
REV:	DATE

S-1

STRUCTURAL NOTES
WAYNE H. REID, S.E. 2205 Arrowhead Dr., Ste A, Carson City, NV 89706
(775) 230-2747, Fax (775) 882-4016

SCOPE:
The scope of this work is limited to the structural elements only. Items relating to architectural, mechanical, electrical, fire safety, roofing site issues, drainage, etc., are the responsibility of others.

The existing construction is assumed to be sound and is the responsibility of the original builder/designer. The effects of the new construction on the existing has been considered and remedial construction indicated as required.

DESIGN /CONSTRUCTION CRITERIA
Code: 2006 IBC, 2006 IRC and ASCE7-05 and codes referenced therein.

All workmanship and materials shall conform to the IBC, and all other codes and standards referenced therein.

DESIGN LOADS:
BUILDING CATEGORY II
SNOW LOAD: Ground Snow = 30 psf, Exposure C, Not Sheltered, Cold Balanced design snow load on roof: 21 psf

ROOF DEAD LOAD: 20 psf, min

FLOORS: Typical Floor 40 psf
Typical Dead Load 5 psf
Partition Load 20 psf

WIND LOAD: 3 sec gust = 100 mph, Exposure C, Enclosed

SEISMIC LOAD: Ss = 115.8%, S1 = 36.6% (for site class B)
Site Class D, Seismic Use Group I, Seismic Design Category D
I=1.0, R=6, Sigma = 2.5

FOUNDATIONS: (IBC CH18)
The Contractor shall be responsible for verifying the capacity of the existing soil, unless a Geotechnical Engineer is retained. The Contractor shall notify the Engineer if significant amounts of clay are present. The contractor shall notify the Engineer if the high water table level is at or above the lowest grade of the structure, unless noted otherwise, the design assumes the water table is below the lowest grade.

Per section 1802, the Owner/Contractor shall provide a Soils Investigation where required by the Building Official. A copy of this report shall be provided to the Engineer for review. If unanticipated site conditions are found which effect the work indicated herein, the Owner/Contractor shall retain the Engineer to provide the necessary modifications.

ELEMENT	DESIGN VALUE	WIND/SEISMIC
Isolated footings	1500 psf	33%
Continuous footings	1500 psf	33%
Active Pressure	35 pcf	
At Rest Pressure	60 pcf	
Min Footing Depth		
Adj. exterior grade	24 in	
Int. grade / sog	12 in	

Before commencing any earthwork the Contractor shall verify locations of all underground utilities or structures and shall not perform any work that will damage or interfere with utilities or structures.

Footing excavations shall be neat and true, with all loose material and standing water removed before footing concrete is placed.

Earth forms may be used for footings only where the soil is firm and stable and the concrete will not be exposed. Concrete surfaces within 6" of finished grade shall be considered exposed surfaces. Where earth forms are used, the excavation shall be at least 1" wider than specified on each side.

All foundations shall be placed a minimum of 12" into firm natural ground or structural fill, or in accordance with the recommendations of a Geotechnical Engineer. Use the most restrictive criteria. Holes due to the removal of large rocks or over-excavation shall be filled with concrete, or structural fill as recommended by a Geotechnical Engineer.

All loose soil and fill, including backfill behind walls shall be placed and compacted in accordance with accepted practice or as recommended by a Geotechnical Engineer, where applicable.

CONCRETE: (IBC CH19)

Location	Compressive Strength	Slump	Entrained Air
Interior & Foundations	3000 psi	3 in	3%
Exposed to exterior	3500 psi	3 in	6%
Garage slabs, exterior slabs	3500 psi	4 in	6%

Design is based on f'c = 2500 psi, therefore special inspection is not required.

REINFORCEMENT: (IBC CH19 AND CH21)
All reinforcement shall be ASTM A 615, grade 60. Lap splice all rebar 40 diameters in concrete and 50 diameters in masonry, but not less than 24". Welding of reinforcement shall conform to AWS D1.4

Provide matching corner bars for all horizontal bars, with each leg 24" or longer. Provide matching dowels for all vertical bars, with minimum standard hook and lap length. At intersections, extend bars to opposite face and provide matching corner bars.

Provide minimum 3" concrete cover where bars are in contact with earth or weather, UNO. Place reinforcement in slabs 1-1/2" clear from top, UNO.

All reinforcement shall be securely tied in place prior to placing concrete.

ANCHOR BOLTS:
Anchor bolts shall be ASTM A307 or ASTM A36 threaded rod. Use cut threads except where bolt is part of a manufactured and tested system such as Simpson SSTB bolts. Typical anchor bolts for wood sole plates are not required to have cut threads. For threaded rod, use heavy hex nut embedded in concrete, embedment measured from concrete surface to nearest side of nut.

Where anchor bolts must be drilled in, use Simpson SET adhesive system (ICC ESR-1772). Follow The Manufacturer's printed instructions. Provide embedment indicated by the Manufacturer to provide the maximum allowable tension, consistent with the edge distances to be provided.

Anchor bolts shall be spaced as indicated in the shear wall schedule. There shall be a minimum of 2 anchor bolts in each piece. There shall be one anchor bolt within 12" of each end, but not closer than 7 bolt diameters. Use Simpson BP Bearing Plates on all anchor bolts.

WOOD (IBC CH 23)
Sawn Lumber shall be Douglas Fir-Larch, and shall have the following minimum grades per IBC 2303, unless noted otherwise on plans.

DESCRIPTION	GRADE	
2x and 4x members	No. 2	Moisture Content (MC) at time of
6x & larger	No. 1	of Fabrication shall not Exceed 19%
Beams & Stringers	No. 1	((If MC exceeds 19%, design
Post & Timbers	No. 1	modifications will be required))

Sole Plates and wood within 6" of earth shall be pressure treated Douglas Fir-Larch, No. 2. Anchor bolts shall be spaced as indicated in the shear wall schedule. There shall be a minimum of 2 anchor bolts in each piece. There shall be one anchor bolt within 12" of each end, but not closer than 7 bolt diameters.

Use 3"x3"x.0.229" plate washers on all anchor bolts for SHEAR WALLS. AB to be max 2" from sill plate edge on sheared side.

Nailing of plywood sheathing for walls, roof and floors shall be as indicated on the plans or in these notes, whichever is the most restrictive. The following abbreviations are used to designate nailing in details and schedules:
BN Boundary nailing. Typical to all blocking over walls and elements indicated to act chords or collectors.
CN Continuous plywood edge nailing. Nailing of plywood panel edges where the edges of consecutive panels fall on the same framing member. Unless noted otherwise, CN shall the same as EN.
EN Edge nailing. Nailing o supported plywood panel edges.
FN Field nailing. Nailing to interior supports.

Headers: The following definitions apply:
T = Trimmer Stud/Post. Where more than double trimmers are called for, tie header to trimmers with ST2122, UNO.
K = King Stud/Post. For studs, nail first to beam with 2 columns of 16d @ 3" over the beam depth. (min 4 – 16d), UNO
S = Single (stud)
D = Double (stud)

PLYWOOD ROOF SHEATHING shall be APA span rated sheathing, Exposure I. Use 1/2" (32/16) APA, Exposure I plywood or OSB, UNO.
minimum nailing: BN=EN=6", CN=FN=12", use 8d, minimum.

PLYWOOD FLOOR SHEATHING shall be APA span rated sheathing, Exposure I. Use 3/4" Sturd-I-Floor, UNO.
minimum nailing: BN=CN=EN=6", CN=FN=12", use 10d ring or screw shank nails.

Lay plywood for floors and roofs with face grain perpendicular to joist span with end joints staggered. Where panels are less than 24" wide, blocking shall be required on all edges.

Provide 1/8" gap between sheets as recommended by APA.

TJI'S, LVL'S, PSL - MANUFACTURED MEMBERS:
All manufactured plywood web I joists and manufactured beams shall be as manufactured by Trus Joist, or approved equal. Installation of accessories, including web stiffeners, shall be as specified by the manufacturer.

TJI's shall conform to ICC ES Report No. ESR-1153

Use the following grades as a minimum. Conform to ICC ES Report No. ESR 1387
LVL's 2.0E PSL's, 2.0E

Exterior applications shall be in accordance with the recommendations in "Guidelines for preservative Treatment of Trus Joist Engineered Lumber Products" Service Level 2 is assumed, UNO. Where the plans refer to Exterior Grade, the member is to be treated in conformance with the above.

FRAMING FASTENERS AND HARDWARE:
Nails are to be common nails. Space nails as required to prevent splitting wood, with a minimum spacing of 11 diameters and a minimum edge distance of 4 diameters. If necessary, predrill holes with a bit diameter equal to the next smaller nail diameter. Nails which are to be exposed shall be either zinc coated, aluminum alloy wire, or stainless steel. Minimum nailing shall be per IBC table 2304.9.1.

Bolts shall be Machine Bolts (MB). use washers where head or nut bears on wood. Holes shall be 1/32" oversized.

All framing hardware shall be as manufactured by the Simpson Strong-Tie Company, or approved equal. Substitutions shall have the appropriate ICBO approvals. Installations shall be as indicated in the catalogs, UNO. Use the fasteners specified for the maximum connector load capacities, UNO.

Provide H1 at all rafter or truss bearings, unless noted others ise.

NAIL SPECIFICATIONS:
All nails are to be Common nails and shall conform to the following table. Nails less than the standard length may be used for attachment of plywood, etc., provided the length is sufficient to provide the minimum penetration of the nail into the member accepting the point (framing member) indicated.

Common Nail Size	Diameter	STD Length	Minimum Penetration
6d	0.113 in	2 in	1.25 in
8d	0.131 in	2.5 in	1.5 in
10d	0.148 in	3 in	1.625 in
12d	0.148 in	3.25 in	1.5 in
16d	0.162 in	3.5 in	
20d	0.192 in	4 in	

FASTENERS AND CONNECTORS USED WITH PRESSURE TREATED WOOD:
Reference is made to SIMPSON Strong-Tie Technical Bulletin "Preservative Treated Wood" and the current Simpson strong-Tie Catalog "Wood Construction Connectors". All fasteners and connectors which are to be in contact with treated wood shall be "ZMAX (G185), Post Hot-Dip Galvanized (HDG) or SST3000 (Stainless Steel). Where exposed to moisture, such as exterior decks, use a coating meeting "High" exposure or use stainless steel.

Fasteners shall also conform to IBC 2304.9.5 "Fasteners in preservative-treated and fire-retardant-treated wood."

SHEAR WALL NOTES:
Shear wall types are noted on the floor or framing plans. Refer to the shear wall schedule for nailing, anchor bolts, framing at plywood edges, etc. Where not noted otherwise, shear all exterior walls per P1 in the schedule (including anchor bolts).

Holdowns to foundation, see floor or foundation plan for type and location. Locate holdowns so as to provide the full holdown capacity based on the connection to wood, UNO. Use HTT22 W/ SSTB20 to minimum double studs, UNO. See typical details.

Locations of drag ties are indicated on the plans. Use MST148 straps UNO.

Where holdowns are indicated to be connected to double studs, nail the studs together with 1/2 PN for the shear wall. Nail sheathing to the members with holdowns with EN, whether or not a plywood edge occurs on the member.

Wall sheathing shall be APA span rated panels, with exterior glue.

TYPICAL LAP OF TOP PLATE:
The top plates of all exterior walls, interior bearing walls and shear walls shall be lap spliced per the typical lap splice detail. Additional requirements may be noted on the plans.

TYPICAL OVER-FRAMING:
Typical over-framing shall be per the standard detail. The roof sheathing over the main framing members or trusses shall continue to and be nailed to blocking over exterior and shear walls, rim joists, gable end trusses, beams, etc., as if the over-framing did not exist.

MANUFACTURED ROOF TRUSSES:
Shall be the responsibility of the manufacturer. The Manufacturer shall indicate the proper bracing, in conformance with the Truss Plate Institute. Design shall be in accordance with the loads specified above and on the drawings. Design shall consider wind uplift.

Where hangers are not indicated on the plan, they shall be the responsibility of the Fabricator.

Drag Loads indicated shall be applied in tension and compression. Lateral loads is collected by the truss top chord, but is resisted by attachment to the bottom chord; Therefore, the Drag truss shall be capable of transferring the uniform shear from the top chord to the bottom chord. Nail roof sheathing to drag trusses with a minimum of BN.

The Truss Manufacturer shall coordinate truss labels and locations on the roof plan.

Use the following minimum connectors and bearings, unless larger connectors/bearings are indicated on the plan:

Typical Trusses	H1 at all truss bearing points, HUS26 hangers
Jack Trusses	H1 at all truss bearing points, LUS26 hangers
Hip, Valley Trusses	HCP2 to bearing points at corners, THJA hangers
Girder trusses	LTS16 to minimum DBL studs or LTS16 at Hoaders/Beams

Unless specifically noted otherwise, bottom chord bracing for trusses is accomplished by gypsum wallboard applied directly to the underside of the trusses. If there is not ceiling attachment, the permanent bracing will be required and coordinated with the truss MFR.

ABBREVIATIONS: Where there are several different meanings, The appropriate meaning shall be that which is most reasonably implied by the work indicated.

AB	Anchor Bolts (A36 or A307)
ARCH	Architect, Architectural
BLDG	Building
BLKG	Blocking
BM	Beam
BOF	Bottom of Footing
BRG	Bearing
CL	Centerline
cc	Center to Center
CJ	Construction Joint
CLR	Clear
CMU	Concrete Masonry Unit
CONT	Continuous
CTR	Center
DBL	Double
D	Double (stud)
DN	Down
DK	Double King stud
do	Ditto
DT	Double Trimmer stud
DTL	Detail
DWG	Drawing
DWL	Dowel
(E)	Existing Construction
EA	Each
EF	Each Face
EJ	Expansion Joint
EMBD	Embed, Embedded, Embedment
ENGR	Engineer, Engineer of Record
EW	Each Way
ES	Each Side
EXT	Exterior
FDN	Foundation
FOW, FOS	Face of Wall, Face of Stud
FT	Feet, Foot
FV	Field Verify
H	Horizontal Reinforcement
HDR	Header
HK	Hook
HSA	Headed Stud Anchor
JST	Joist
JT	Joint
K	Kips (1000 lbs)
K	King Stud (Studs or post)
LB	Lag Bolt
LBS	Pounds
MAX	Maximum
MB	Machine Bolt (A307)
MFR	Manufactured
MIN	Minimum
(N)	New Construction
NIC	Not In Contract
NTS	Not To Scale
OC,oc	On Center
OPNG	Opening
OPP	Opposite Face
PC	Pipe Column
PL	Plate
PJF	Premolded Joint Filler
PT	Pressure Treated
RE	Refer
REINF	Reinforcement
REQD	Required
S	Single (stud)
SCHD	Schedule
SIM	Similar
SOG	Slab-On-Grade
SK	Single King stud
SPAC	Spacing
STD	Standard
STFNR	Stiffener
ST	Single Trimmer stud
STL	Steel
STR	Straight, Strength
STRUC	Structural
SUPP	Support
SW	Shear Wall
SYMM	Symmetrical
T	Trimmer (stud/post)
THRD	Threaded
TRANS	Transverse
TS	Structural Tube Steel
TYP	Typical
UNO	Unless Noted Otherwise
V, Vert	Vertical
W/	With
W/O	Without
WD	Wood
WF	Wide Flange
WP	Work Point, Water Proof

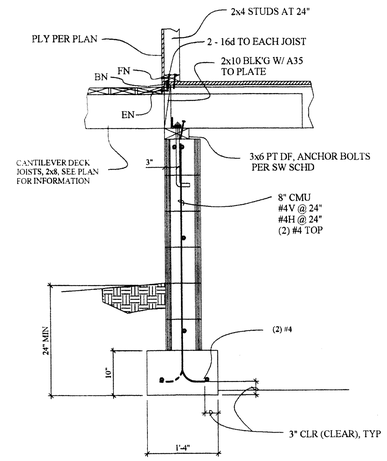

TYP CONC WALL FTG 106
SCALE: 3/4" = 1'0" wc100

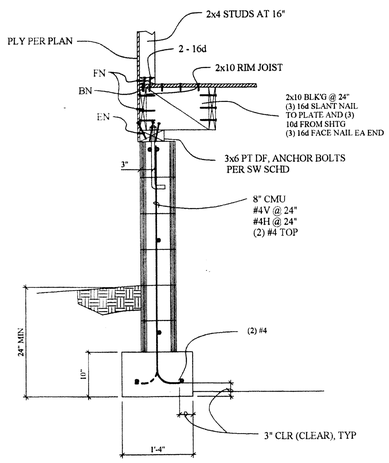

TYP CONC WALL FTG 105
SCALE: 3/4" = 1'0" wc100

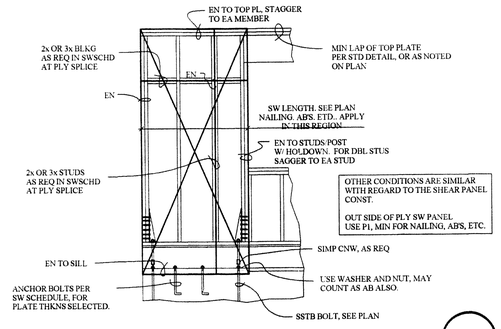

STD SW PANEL ACROSS FLR 103
SCALE: NTS w171

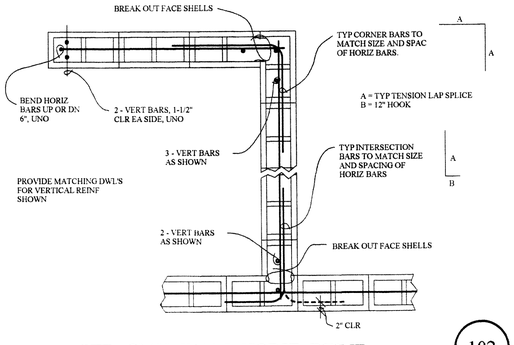

STD CMU WALL HORIZ. REINF 102
SCALE: 3/4" = 1'0" m101

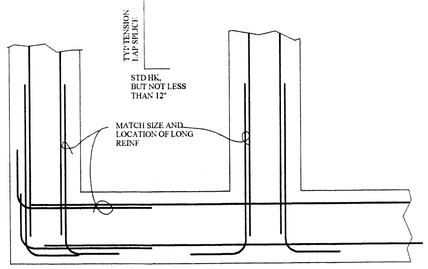

SIMILAR FOR REINF AT OUTSIDE FACE ONLY

STD FTG- HORIZ REINF 101
SCALE: 3/4" = 1'0" c102

MARK	(1) ALLOW SHEAR PLF	(2) MINIMUM PLYWOOD THKNS	(3) COMMON NAIL SIZE	(4) EN	(5) 3x STUD BLKG	(6) PN PLATE NAILING 16d	SDS1/4	PINS	(7) 5/8" ANCHOR BOLTS 2x PL	3x PL	(8) A35	(9) LTP4
P1 sw	260	3/8"	8d	6"	NO	10"	16"	20"	48"	48"	20	28
P2 sw	380	3/8"	8d	4"	YES	6"	10"	14"	18"	42"	14	20
P3 sw	490	3/8"	8d	3"	YES	6"	8"	11"	14"	36"	10	14
P4 sw	640	3/8"	8d	2"	YES	4"	6"	8"	NA	26"	8	12

(1) SHEAR WALL MARK, SEE PLAN. UNLESS NOTED OTHERWISE, THE SHEAR WALL PANEL EXTENDS BETWEEN WALL ENDS, CORNERS OR OPENINGS. GENERALLY THERE ARE HOLDOWNS, STRAPS OR POSTS EACH SIDE OF THE PANEL, HOWEVER THIS IS NOT ALWAYS THE CASE.

(2) ALLOWABLE SHEAR, PER THE IBC FOR WIND AND SEISMIC LOADS (WIND MAY BE INCREASED 40% FOR SHEATHING, BUT NOT FOR OTHER NAILING, ABS, ETC.)

(3) PLYWOOD (OSB) MINIMUM THICKNESS. 5/8" T1-11 MAY BE USED IN LIEU OF 3/8" PLY. 3/8" PLYWOOD SHALL BE SUPPORTED ON STUDS SPACED A MAXIMUM 16" OC. PLYWOOD SHALL BE A MINIMUM C-D, STRUC II, EXPOSURE I. PLYWOOD SHALL BE INSTALLED WITH THE LONG DIM. VERTICALLY. ALL EDGES SHALL BE SUPPORTED BY STUDS OR BLOCKING.

(4) COMMON NAIL SIZE. BOX NAILS ARE NOT ALLOWED, UNLESS AN APPROVED EQUIV. SIZE IS OBTAINED, IN WRITING, FROM THE ENGINEER.

(5) EN = EDGE NAIL SPACING, TO ALL EDGES. FN = FIELD NAILING SHALL BE 12" OC. NAIL SIZE PER 4.

(6) YES INDICATES THAT MINIMUM 3x STUDS ARE REQUIRED AT PLY EDGES AND FOR BLKG. DOUBLE STUDS MAY BE USED, PROVIDED THAT THE PLY JOINT OCCURS AT THE STUD INTERFACE AND ALSO THAT THE STUDS ARE NAILED TOGETHER WITH PN.

(7) PN = PLATE NAILING. USE PN WHEN SHEAR IS TO BE TRANSVERRED TO A PLATE (W/ EN), WHICH IS THEN NAILED TO ANOTHER ELEMENT (W/ PN). FOR EXAMPLE, NAILING A PLATE TO A FLOOR JOIST. SDS SCREWS TO HAVE MIN 1 1/2" PENETRATION

(8) (9) SPACING OF ANCHOR BOLTS. 3x OR 4x, USE 12" LENGHT. WITH 4x PLATES MAY COUNTER SINK BOLTS 1" MAX. 3" SQUARE x 0.229" WASHERS REQUIRED FOR ALL ANCHOR BOLTS.

(10) (11) SHEAR TRANSFER, WHERE CALLED FOR ON PLAN

PLY SHEAR WALL SCHD - IBC (EQ) 104
SCALE: NTS w115

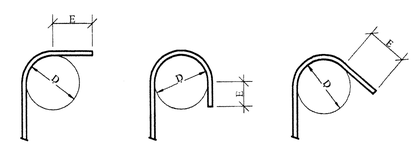

TYPE	90 DEG HOOK	180 DEG HOOK	135 DEG HOOK
STANDARD HOOKS	E = 12d	E = 4d WITH 2 1/2" MIN	NA
STIRRUP AND TIE HOOKS STANDARD	E = 6d FOR #5 AND SMALLER E = 12d FOR #6 #7 #8 NA FOR #8 & LARGER	NA	E = 6d FOR #8 AND SMALLER NA FOR #9 & LARGER
STIRRUP AND TIE HOOKS SEISMIC	NA	NA	E = 6d WITH 3" MIN

MINIMUM BEND DIAMETER:
#3 THRU #8 D = 6d
#9, #10, #11 D = 8d
#14, #18 D = 10d

NA = NOT APPLICABLE
d = BAR DIAMETER
STANDARD HOOKS ARE TO BE USED WHERE REINF IS INDICATE TO BE TERMINATED WITH A HOOK (HK)
UNLESS NOTED OTHERWISE HOOPS AND TIES SHALL QUALIFY AS SEISMIC HOOKS

STD HOOKS & BENDS IN REINF 100
SCALE: 3/4" = 1'0" c100

WAYNE H. REID, S.E.
STRUCTURAL ENGINEER
2205 ARROWHEAD DR. STE. A
CARSON CITY, NV 89706
(775) 230-2747

GARAGE / SHED ADDITION
ED SILSBY
2642 BOYLE ST.
CARSON CITY, NV

DETAILS

SCALE 3/4" = 1'-0", UNO	
PROJECT 291156	
DATE 2/6/2009	
DRAWN BY WHR	
CHECKED BY WHR	
REV:	DATE
SD - 1	

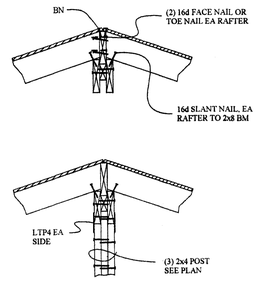

TYP SLOPING RAFTER TO WALL (207)

SCALE: 3/4" = 1'0" w116

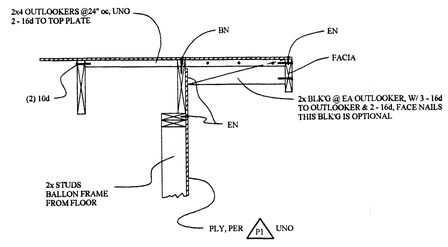

TYP GABLE END - BALLON FRAME (206)

SCALE: 3/4" = 1'0" w153

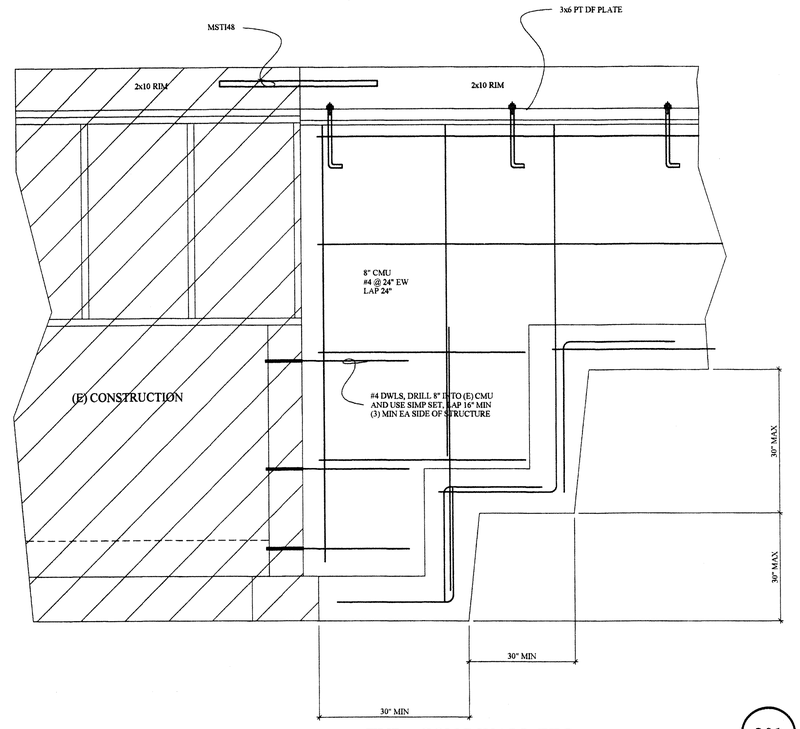

TYP CONC WALL FTG (201)

SCALE: 3/4" = 1'0" wc100

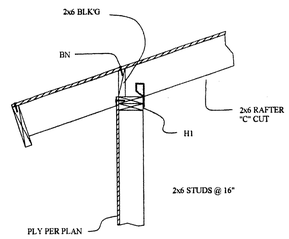

TYP SLOPING RAFTER TO WALL (205)

SCALE: 3/4" = 1'0" w116

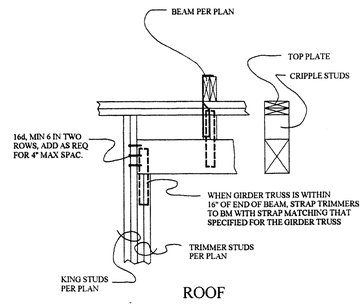

TYP LOW HEADER (203)

SCALE: 3/4" = 1'0" w171

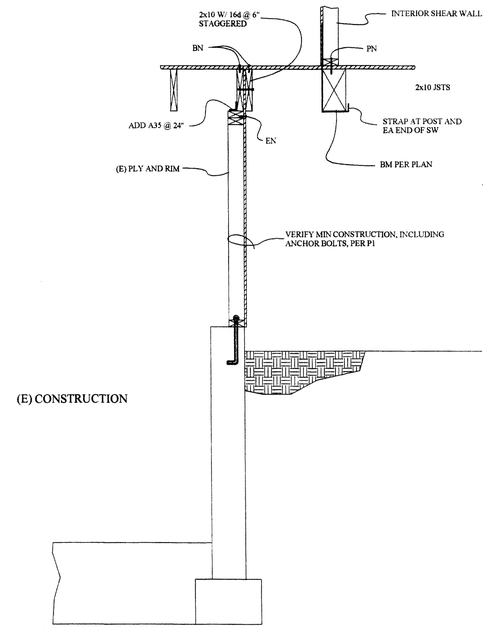

TYP CONC WALL FTG (200)

SCALE: 3/4" = 1'0" wc100

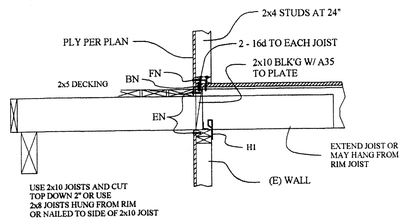

TYP CONC WALL FTG (208)

SCALE: 3/4" = 1'0" wc100

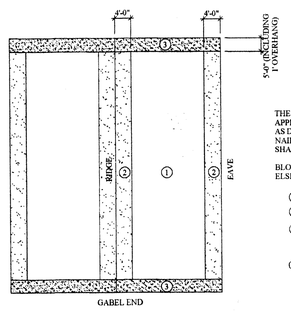

THE FOLLOWING MINIMUM ROOF NAILING APPIES TO GABEL ENDS, EAVES AND RIDGE ZONES AS DEFINED IN THE FIGURE. (WHERE MORE STRINGENT NAILING IS SPECIFIED ELSEWHERE. THAT NAILING SHALL APPLY.

BLOCKING IS NOT REQ, UNLESS CALLED FOR ELSEWHERE

1. 8d @ EN=BN=6", FN=12"
2. 8d @ EN=BN=6", FN=6"
3. 8d @ EN=BN=4", FN=6"

(WIND SPEED 80 TO 90 MPH)

TYP ROOF FASTENING ZONES (204)

SCALE: 3/4" = 1'0" w153

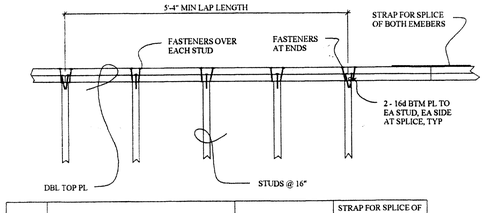

MARK	LAP SPLICE	ALLOWABLE	STRAP FOR SPLICE OF BOTH MEMBERS
TS1	2 - 16d EA END, 3 - 16d OVER EA STUD	2067 LB 2x4 OR 2x6	MST27
TS2	2 - 16d EA END, 4 - 16d OVER EA STUD	2545 LB 2x4 OR 2x6	MST37
TS3	2 - 16d AND 2 - SDS1/4x3 EACH END 2 - 16d AND 2 - SDS1/4x3 OVER EA STUD	4830 LB FOR 2x4 5208 LB 2x6	MST60

LAP SPLICE TO BE USED ON ALL EXTERIOR WALLS, INTERIOR BEARING WALLS AND SHEAR WALLS. WHERE NOT NOTED OTHERWISE, USE TS1

STD TOP PLATE LAP SPLICE (202)

SCALE: 3/4" = 1'0" w111

WAYNE H. REID, S.E.
STRUCTURAL ENGINEER
2205 ARROWHEAD DR. STE. A
CARSON CITY, NV 89706
(775) 230-2747

GARAGE / SHED ADDITION
ED SILSBY
2642 BOYLE ST.
CARSON CITY, NV

REGISTERED PROFESSIONAL ENGINEER STATE OF NEVADA
WAYNE H. REID
CIVIL STRUCTURAL
NO. 6559

EXP 12/30/07
DATE 7/10/07
STRUCTURAL STRENGTH ONLY

DETAILS

SCALE 3/4" = 1'-0", UNO	
PROJECT 291156	
DATE 7/8/2009	
DRAWN BY WHR	
CHECKED BY WHR	
REV:	DATE

SD - 2